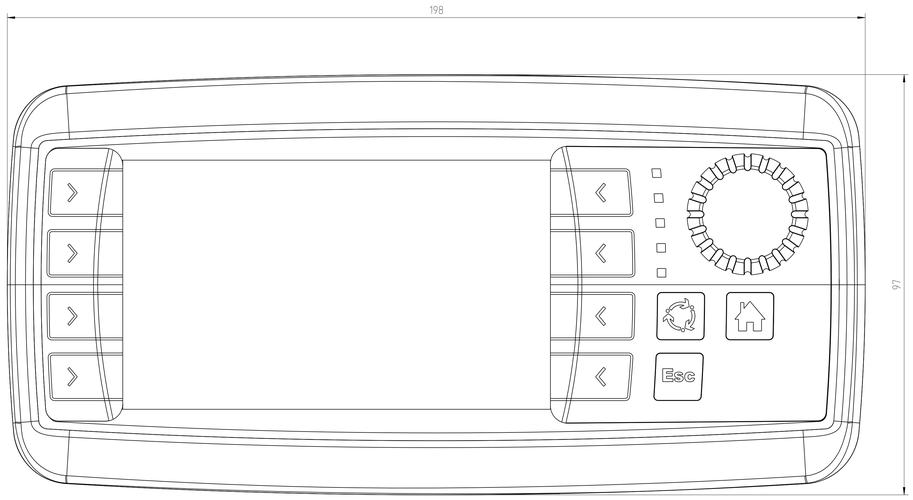

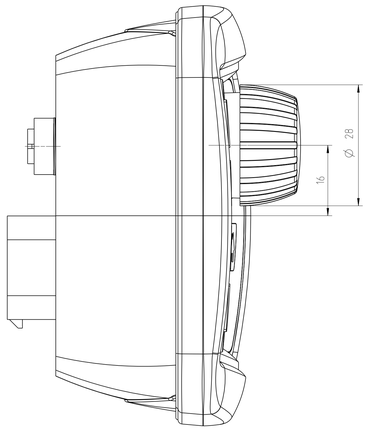

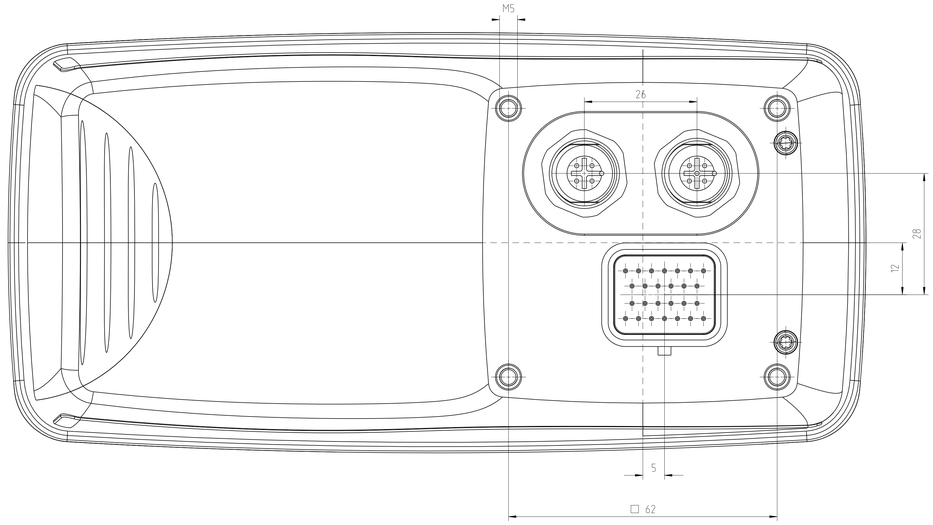

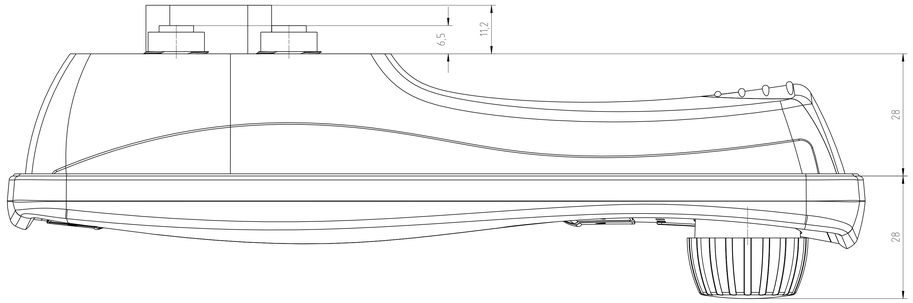

Preliminary Drawing

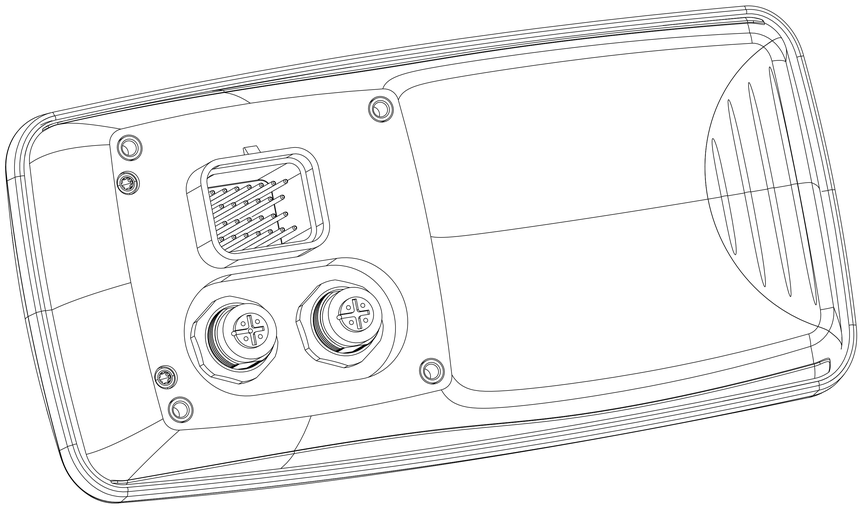

Scope of application	Allowed devation	Surface	Scale 2:1	(Weight) -
For this drawing all rights are reserved Delivery to third party, copying and Misuse without our permission (Protection against) (After Competition Act)			Material - (Material number) -	
- - -